
powerbone®
Dental Implant System
PLASMA
ACTIVATED SURFACE



Next Generation Implant Technology


POWER

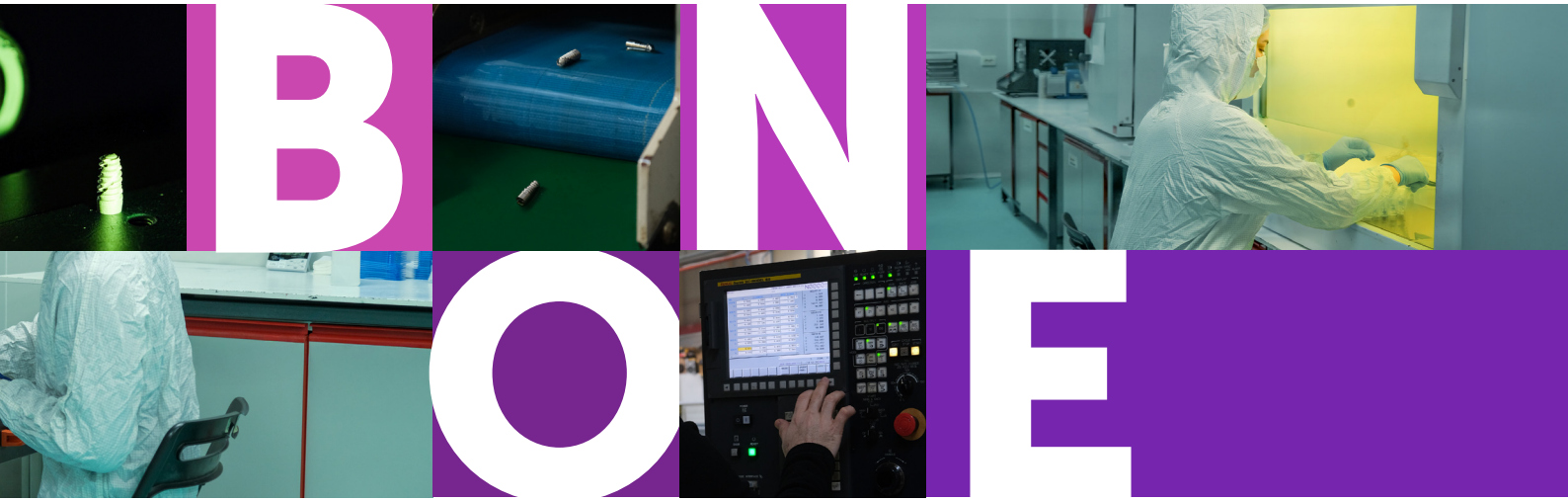
BN
OE


Confidence begins with a
beautiful smile.

Dear Valued Dentist,

Powerbone Dental Implant is manufactured by Bonegraft Biyolojik founded in 2015 at the Ege University Technology Development Center in Izmir.

We the outset science has been our guide supported by meticulous R&D and precision manufacturing activities at our facility located in the Manisa Industrial Zone. This facility already meets ISO-5, ISO-6, ISO-7, and ISO-8 clean room standards.

We prioritize technical excellence, trust and sustainability of long-term collaborations. Our goal is to advance scientifically while delivering solutions that clinicians, can confidently rely on in daily practice. These are the values that support our global presence.

Our young, and dynamic team, listens to our partners and values their experience. We apply this insight to focus on consistently enhancing our engineering expertise. Our rapid growth has highlighted the benefit of this mutual partnership.

We sincerely thank you for your trust and support, and we look forward to achieving many more successful collaborations together.

Best regards,

Powerbone Dental Implant Family

CONTENTS

010 About us & Our History

012 Mechanical Design



013 Internal Mechanical Design



023 Dental Implant Dimensions



026 Abutment Removal System



028 Auxiliary Prosthetic Components



032 Auxiliary Components For Screw-Retained Solutions



033 Auxiliary Components



034 Custom Solutions





016 Plasma-Activated Surface

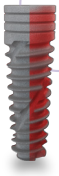

019 Comparison of Sla Surface and Plasma-Activated Surface



022 Dental Implant Package Opening Procedure



029 Auxiliary Prosthetic Components - Implant-Level Impression Components



030 Cement-Retained Solutions



031 Screw-Retained Solutions



035 Removable Prosthesis Solutions



038 Surgical Kit



039 Drilling Protocol



ABOUT US & OUR HISTORY

Bonegraft has strengthened its position in biomaterial technologies and dental solutions since 2015, building on a manufacturing foundation dating back to 1997, rooted in high-precision machining and engineering. This infrastructure was continuously developed and, by 2005, enabled the production of high-precision medical components. This early capability laid the groundwork for Bonegraft's transition into advanced medical manufacturing.

Following a major technology investment in 2009, a modern facility compliant with international standards was established in the Manisa Organized Industrial Zone, with 4,800 m^2 of enclosed production space, and began operations in March 2010. Today, it serves as a reliable manufacturing base supporting Bonegraft's product development with over 20 years of experience, advanced expertise, and adherence to global quality standards. The facility plays a critical role in ensuring scalable production and consistent product quality.

Dental implant design, prototyping, and mass production are carried out within this advanced manufacturing environment.

Our infrastructure provides:

- *Advanced CNC machining centers*
- *High-precision measurement and quality control systems*
- *An experienced team of local and international engineers*
- *Strong technical capacity and production consistency*

This capability enables advanced surface technologies for enhanced osseointegration, optimized mechanical designs suitable for immediate loading, and high-performance implants.

Combined with manufacturing expertise since 1997 and ongoing biomaterial innovation since 2015, this foundation led to the launch of the Titanium SLA Surface Plasma Active Dental Implant in 2021.



1997

Laying The Foundations

Founded in 1997, Metrosan began designing and manufacturing projects across various industrial sectors that required advanced technology and engineering expertise. This period laid the foundation for the company's technology-driven manufacturing culture.

2003

The Beginning of Medical Device Manufacturing

By 2003, the manufacturing experience and technological infrastructure Metrosan had acquired had positioned the company as a strong OEM manufacturer for both domestic and international brands in the biomedical sector, particularly in the field of spinal surgery.

2009

Modern Manufacturing Facility Invesment

With the goal of achieving international success in the biomedical field, the company established a modern manufacturing facility equipped with advanced technology in the Manisa Organized Industrial Zone in 2009.

2010

World-Class Manufacturing

Since March 2010, Metrosan has operated in a facility with 4,800 m^2 of enclosed production space, managing all processes in-house from design to mass production and delivering certified products in compliance with national and international standards.

ISO 13485:2016



CE CERTIFICATE



2014

Establishment of Bonegraft Biomaterials

The establishment process of Bonegraft Biomaterials began with the academic studies and laboratory experimentation initiated in 2014. This period laid the groundwork for the scientifically validated and clinically focused development of the brand's products. At the same time, Bonegraft Biomaterials was officially established and commenced its national and international commercial activities.

CE CERTIFICATE



CERTIFICATE OF FREE SALE



2021+

The Emergence of the Powerbone Dental Implant

With the advancement of Bonegraft Biomaterials' R&D and manufacturing capabilities, dental implant production was launched under the Powerbone brand. This step enabled the company to expand its product portfolio by combining its expertise in biomaterials with dental implant technologies.

BEVELED COLLAR

Presents bone loss by reducing bone stress.

ACTIVE THREAD DESIGN

A slim and progressively tapered design that increases bone-to-implant contact and provides high primary stability.

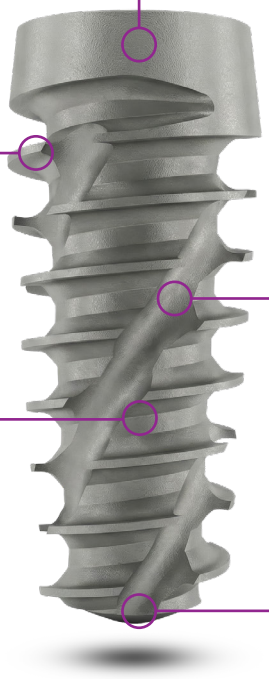

SPIRAL GROOVE

Collects bone particles and distributes them along the implant surface.

DOUBLE CUTTING EDGE

Provides controlled cutting in both forward and reverse directions during implant placement.

ROUNDED APEX

Does not damage the mandibular nerve canal or sinuses.

SWITCH PLATFORM

Helps minimize bone loss and preserve the gingival papilla, thereby enhancing esthetic outcomes.

INTERNAL CONICAL CONNECTION

A deep internal conical connection with a 5° taper designed to reduce loading stress.

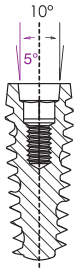

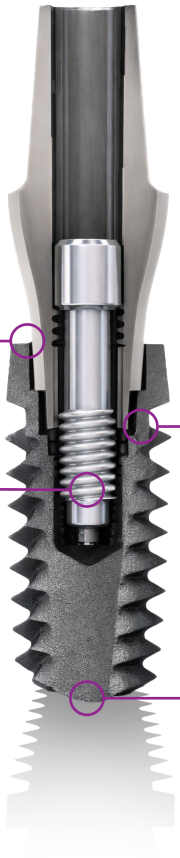

INTERNAL CONNECTION

M1.8 mm internal threads that ensure secure retention of the abutment and prosthetic components within the implant.

HEXAGONAL CONNECTION

A secure hexagonal connection designed to prevent rotation.

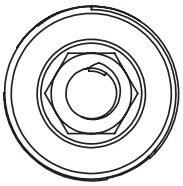

PLASMA-ACTIVATED SURFACE



PLASMA ACTIVATED SURFACE

Osseointegration is not a coincidence; it is the result of surface engineering.

The Plasma-Activated Surface is developed using advanced plasma technology that goes beyond conventional SLA topography, biologically activating the surface energy.

Beyond Conventional SLA Surfaces

Thanks to plasma activation:

- *Hydrocarbon contamination is eliminated.*
- *Surface energy is increased to its maximum level.*
- *A superhydrophilic surface character is achieved.*
- *The contact angle is significantly reduced.*
- *Blood and biological fluids spread immediately and uniformly over the surface.*



Implant Solution Filling

Active Surface, Preserved Performance

To maintain the superhydrophilic character, the implants are stored in solution.
This ensures that:

- *Surface activity remains stable until the moment of clinical application.*
- *Atmospheric contamination is prevented.*
- *Hydrophilic performance is preserved.*

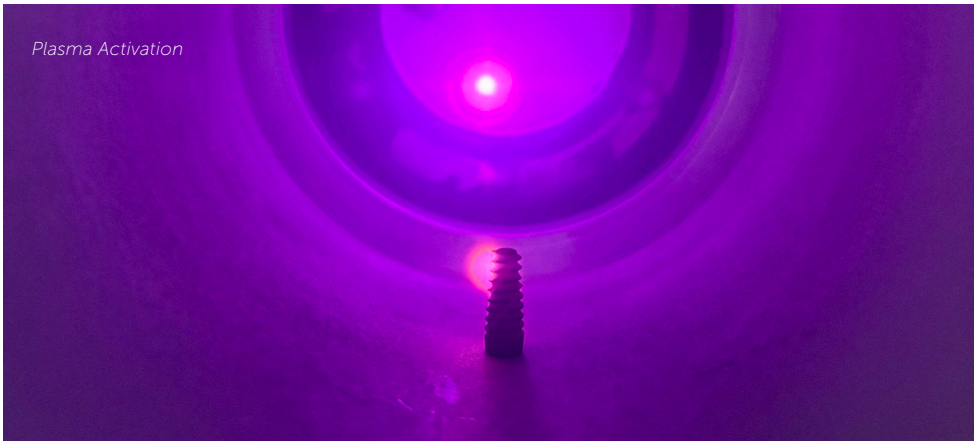

Plasma Activation





From Microstructure to Macro Stability

The Plasma-Activated Surface ensures maximum contact with the trabecular bone structure. Mechanical retention is enhanced by biological activation.
This combination is designed to provide:

- *Increased bone-to-implant contact*
- *Strong early stability*
- *More predictable osseointegration*

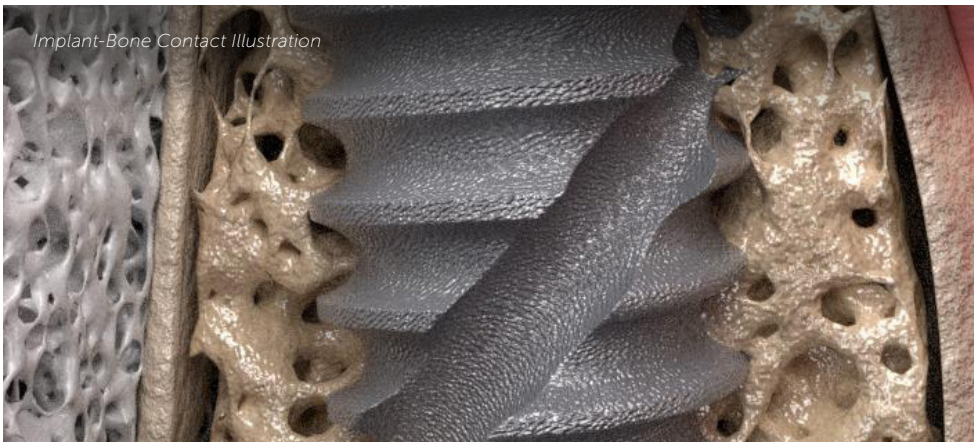

Micro-Rough Topography

Surface roughness (Ra) ranges between 1.5–2.5 mm and is at an optimal roughness level.

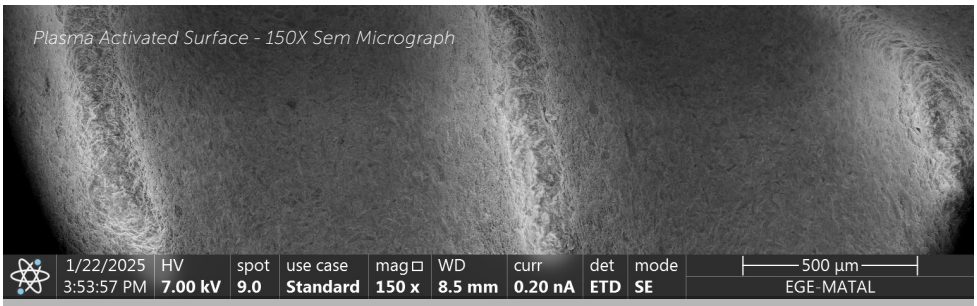

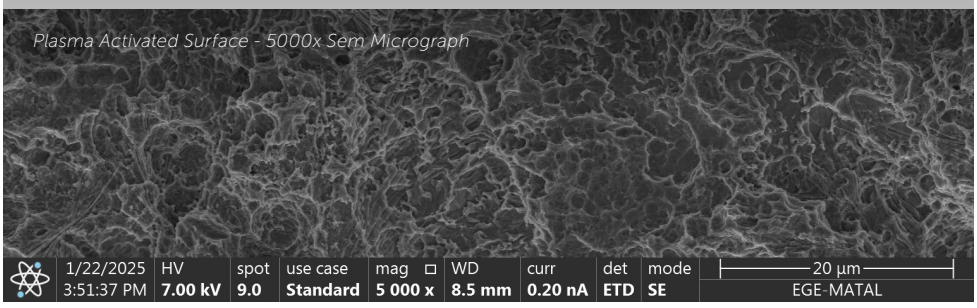

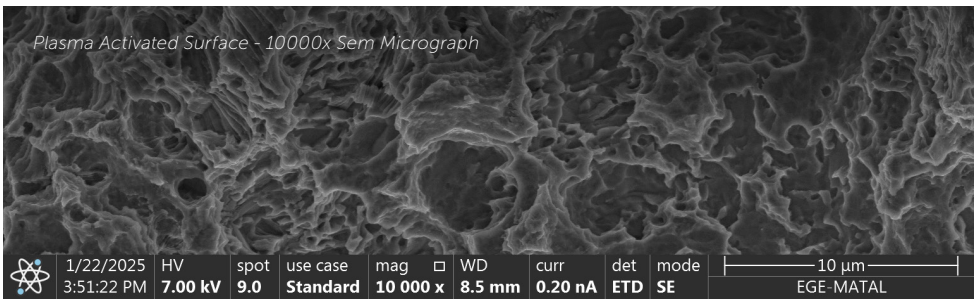

Critical Superiority in Contact Angle

As clearly demonstrated in the wettability comparison: The Plasma-Activated Surface absorbs the liquid, whereas the conventional SLA surface retains it. A low contact angle means:

- *Rapid fibrin organization*
- *Increased protein adsorption*
- *Early osteoblast adhesion*

Every biological advantage gained in the early phase forms the foundation of long-term stability.

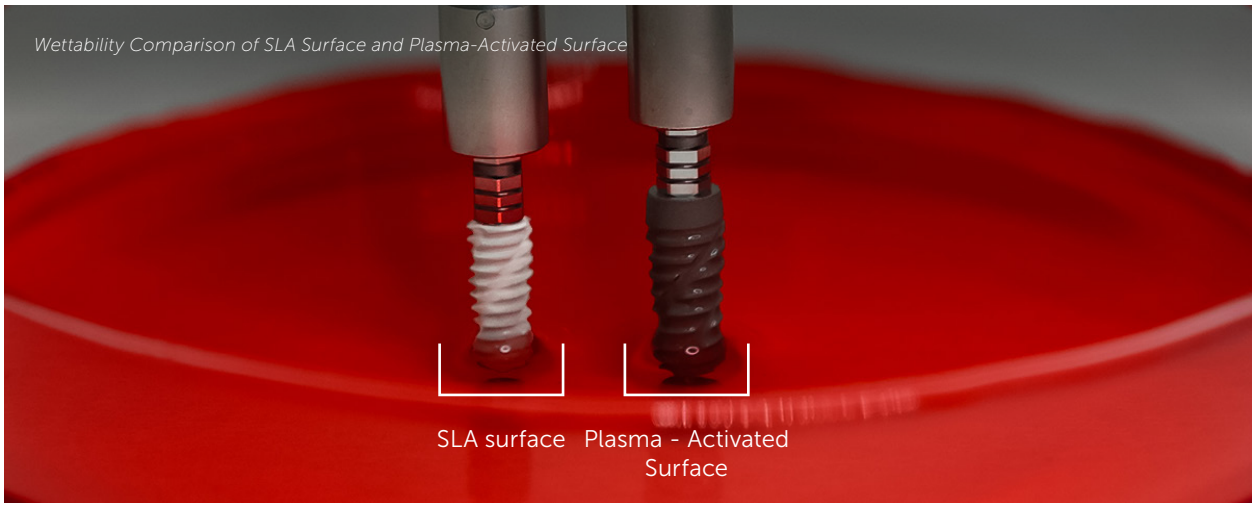

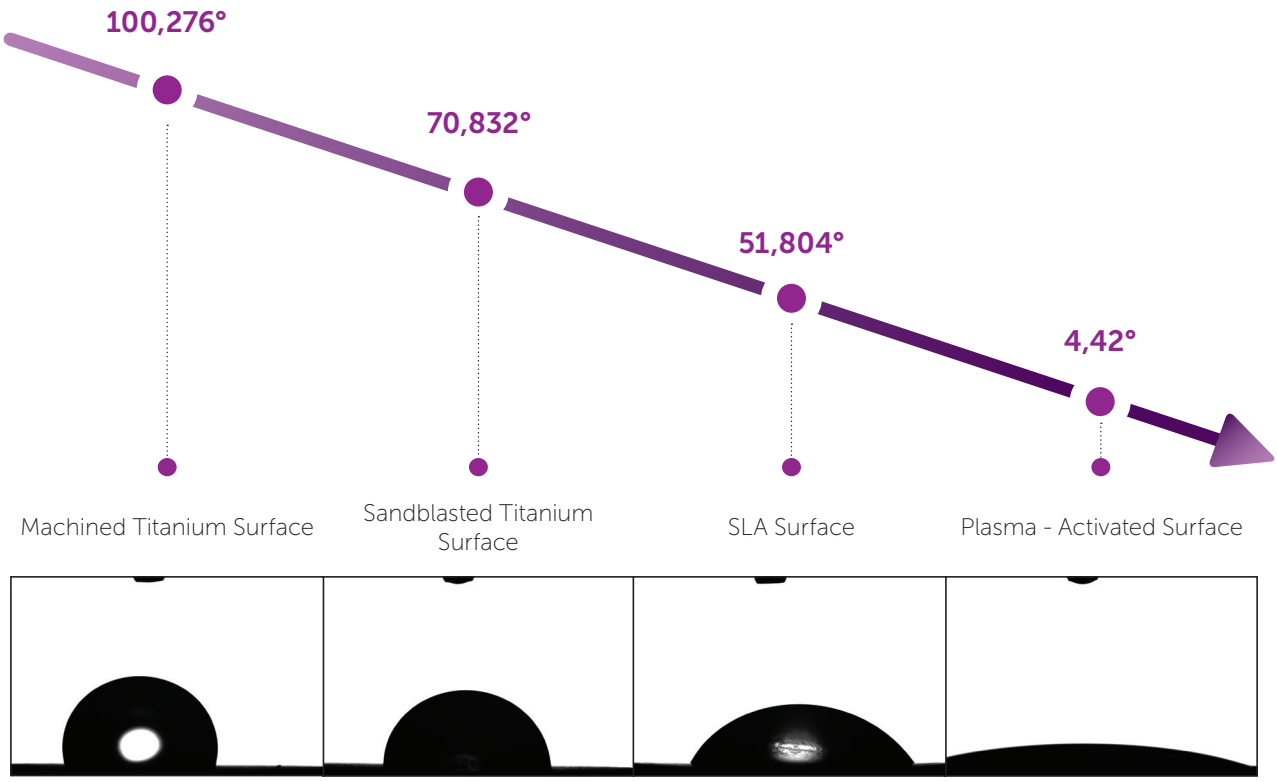

Contact Angle Comparison Graph for Different Surface Treatments.

Conclusion:

Higher surface energy. Lower contact angle. Faster biological initiation.
***The Plasma-Activated Surface** represents the next level in surface engineering.*

COMPARISON OF
SLA SURFACE AND PLASMA-ACTIVATED SURFACE

	SLA SURFACE	PLASMA-ACTIVATED SURFACE
Surface Treathment Technology	Clinical success rate *(sand-blasted, large grit acid-etched)* sandblasting with 250-500 grit acid etching.	Following SLA surface treatment (sandblastingwith 250–500 µm grit + acid etching), vacuum plasma treatment is applied to create a highly hydrophilic surface and eliminate hydrocarbons.
Surface Roughness (Topography)	Surface Topography Ra ≈ 1.5–2.0 µm	Surface Topography Ra ≈ 1.5–2.0 µm *(Same topography, different surface chemistry)*
Wettability Contact Angle	Contact Angle >50° *(hydrophobic)*	Contact Angle <20° *(high hydrophilicity)*, with active surface preservation through storage in solution.
Initial Cellular Response	Cell adhesion begins within the first 24-48 hours	Cell attachment and protein adsorption increase within the first 1–4 hours.
Osteoblast Activty	Osteoblast proliferation increases within 3–7 days.	A marked increase in osteoblast proliferation is observed within 1–3 days. *(faster cellular activation)*
Osseointegration Process	Osseointegration time: 4–6 weeks. *(Early loading is not recommended.)*	Osseointegration time: 2-3 weeks *(Suitable for early prosthetic loading.)*
Bone-To-Implant Contact (BIC)	Bone-to-Implant Contact Percentage %60–70 *(Mean value at week 6)*	Bone-to-Implant Contact Percentage %75–85 *(Can be observed even by week 3)*
Clinical Indications	Clinical indication: Challenging cases *(smokers (%80-88), diabetes (%85-90), low bone density (generally 3-6 Months), early loading (%92-95))*	Clinical indication: Challenging cases *(smokers (%94–96), diabetes (%95+), low bone density (prosthetic loading possible within 3–4 weeks), early loading (%97+))*
Clinical Success Rate	Clinical success rate >%95 *(supported by long-term data)*	Clinical success rate >%97 *(early success and rapid integration)*

DENTAL IMPLANT
PACKAGE OPENING PROCEDURE AND DIMENSIONS





DENTAL IMPLANT PACKAGE OPENING PROCEDURE

1

Press the notched section of the cardboard box to tear it open and remove the blister inside.



2

Peel back the Tyvek lid from the opening tab to open the blister.



3

Turn the cap of the implant tube counterclockwise to open it.



4

Make sure the cap is fully opened. Then lift it upward and turn it upside down.

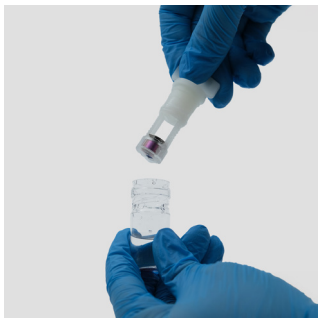

5

Rotate the transparent cap clockwise to separate the implant from its protective casing.

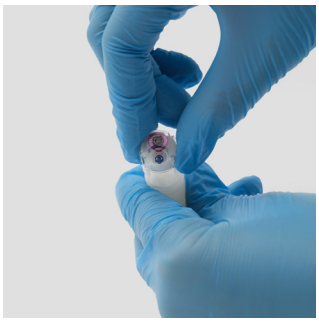

6

Make sure the implant's internal hex connection is fully exposed.

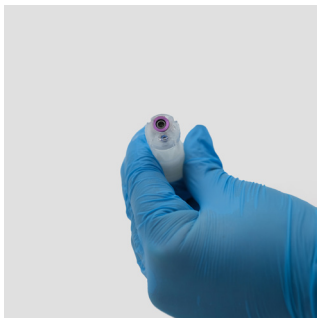

7

Use the implant driver from the surgical kit to insert the implant vertically with gentle pressure.

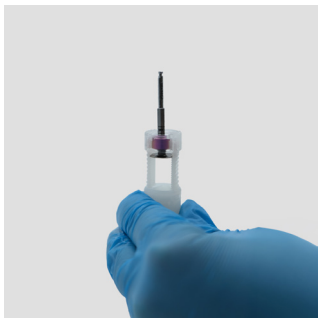

8

After the implant driver is in place, lift the implant vertically to remove it from its casing.

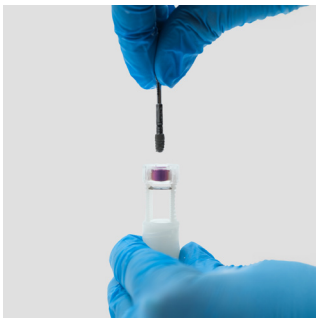

9

After implantation, rotate the transparent cap of the cover screw to ensure the internal hex is accessible.

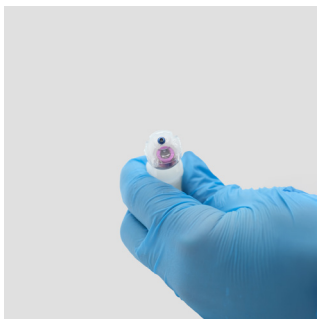

10

Place the driver vertically into the internal hex of the healing screw and turn it counterclockwise.

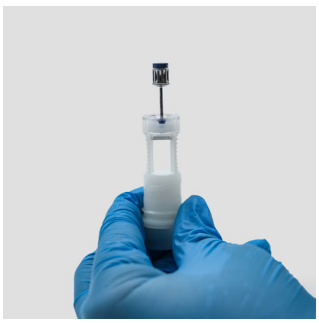

11

Lift the healing screw vertically upward to remove it from the tube.





Diameter / ø	Length / L (mm)	Reference Code
3,3	08,00	Power-DI33080
	10,00	Power-DI33100
	11,50	Power-DI33110
	13,00	Power-DI33130
3,8	08,00	Power-DI38080
	10,00	Power-DI38100
	11,50	Power-DI38115
	13,00	Power-DI38130

• *The recommended torque value is 25-50 Ncm.*



Diameter / ø	Length / L (mm)	Reference Code
4,2	06,00	Power-DI42060
	08,00	Power-DI42080
	10,00	Power-DI42100
	11,50	Power-DI42115
	13,00	Power-DI42130
4,6	06,00	Power-DI46060
	08,00	Power-DI46080
	10,00	Power-DI46100
	11,50	Power-DI42115
	13,00	Power-DI46130
5,0	06,00	Power-DI50060
	08,00	Power-DI50080
	10,00	Power-DI50100
	11,50	Power-DI50115
	13,00	Power-DI50130

• *The recommended torque value is 25-50 Ncm.*

PROSTHETIC ABUTMENT SOLUTIONS





ABUTMENT REMOVAL SYSTEM

CONTROLLED AND SECURE

In conical connection implant systems, the abutment–implant interface provides superior mechanical stability due to its high surface contact area and frictional force. While this stability represents a significant advantage for long-term function, certain clinical situations—such as prosthetic revision, maintenance requirements, or superstructure replacement—may necessitate the controlled removal of the abutment. High contact pressure, preload effect, and microscopic surface adaptation over time, along with the 5° internal conical connection, may result in a cold welding effect; this is an intended and inherent mechanical outcome of the conical connection geometry.

This extraction system allows the abutment to be removed axially in a balanced and predictable manner by generating a controlled counterforce against the internal implant surface through a central screw mechanism. The transmission of force along the axial direction minimizes the formation of lateral stress, helps preserve the internal connection surface of the implant, and eliminates the need for impact-based or traumatic intervention. Through controlled and gradual force transfer, the risk of deformation at the connection interface is reduced and the long-term biomechanical integrity of the implant is maintained.

Designed for the safe management of conical connections with high mechanical stability, this system provides the clinician with maximum control throughout the procedure and delivers a reliable and predictable solution both in routine revisions and in interventions that may be required after long-term function.

ABUTMENT EXTRACTOR DRIVER

Lenght / L (mm)	Reference Code
17.5	Power-396.5000126
25.0	Power-396.5000127



1

Prepare the driver before starting the extraction protocol.



2

Place the driver into the abutment screw and turn it clockwise.

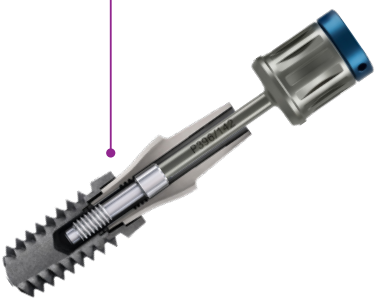

3

Lift the screw upward together with the driver to remove it.



4

Set the abutment extractor screw to separate the abutment from the implant.



5

Insert the abutment extractor driver into the implant.

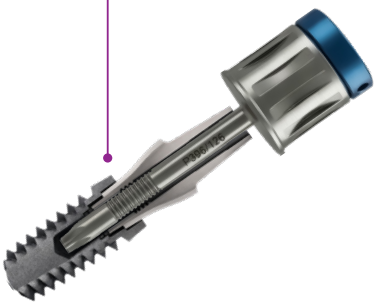

6

Fully seat the driver into the internal connection and turn it clockwise.

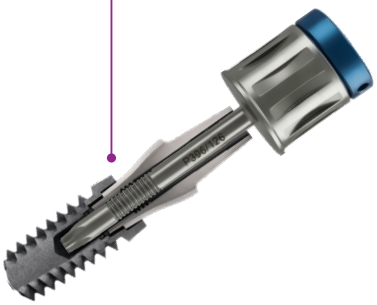

7

Separate the conical connection between the abutment and the implant.

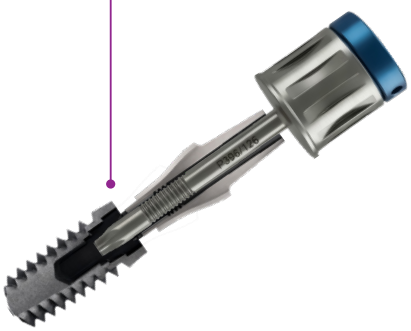

8

The abutment is detached from the implant, and the system is ready for use.

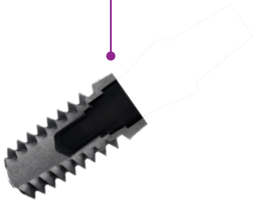

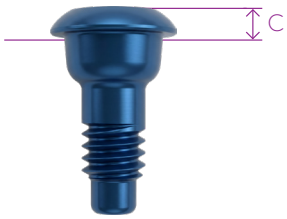

COVER SCREW	
Gingiva Level / C	Reference Code
0.8	Power-A00001-26

• *The recommended torque value is 10-15 Ncm.*



HEALING ABUTMENT		
Diameter / ø	Height / H (mm)	Reference Code
4.0	2	Power-A00014-02
	3	Power-A00014-03
	4	Power-A00014-04
	5	Power-A00014-05
	6	Power-A00014-06
	7	Power-A00014-07
5.0	2	Power-A00015-02
	3	Power-A00015-03
	4	Power-A00015-04
	5	Power-A00015-05
	6	Power-A00015-06
	7	Power-A00015-07
6.0	3	Power-A00016-03
	4	Power-A00016-04
	5	Power-A00016-05
	6	Power-A00016-06
	7	Power-A00016-07
7.0	3	Power-A00014-10
	5	Power-A00014-12

• *The recommended torque value is 10-15 Ncm.*



LABORATORY ANALOGUE

Diameter/ ø	Height / H (mm)	Reference Code
3.5	12	Power-A00002-38

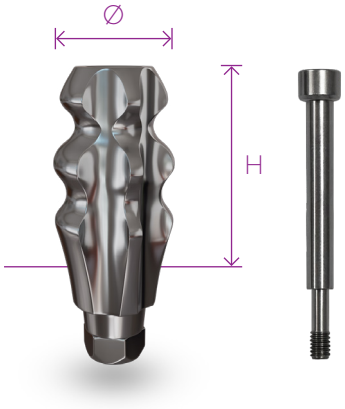

IMPRESSION COPING FOR CLOSED TRAY (TRANSFER TYPE)

Diameter / ø	Height / H (mm)	Reference Code
5.0	12	Power-A00002-27
	16	Power-A00002-28

• *The recommended torque value is 10-15 Ncm.*

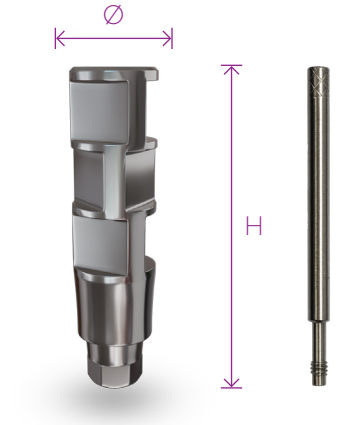

IMPRESSION COPING FOR OPENED TRAY (PICK-UP TYPE)

Diameter / ø	Height/H (mm)	Reference Code
4.0	12	Power-A00002-31

• *The recommended torque value is 10-15 Ncm.*

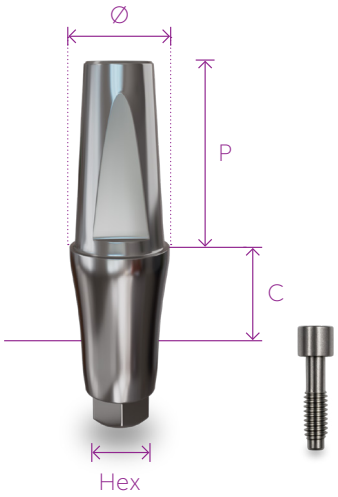

STRAIGHT ABUTMENT			
Diameter / ø	Gingiva Level / C	Post Height / P	Reference Code
4.0	1.0	7 / HEX	Power-A00001-05
	2.0	7 / HEX	Power-A00002-05
	3.0	7 / HEX	Power-A00003-05
	4.0	7 / HEX	Power-A00004-05
	5.0	7 / HEX	Power-A00004-25
5.0	1.0	7 / HEX	Power-A00001-06
	2.0	7 / HEX	Power-A00002-06
	3.0	7 / HEX	Power-A00003-06
	4.0	7 / HEX	Power-A00004-06
	5.0	7 / HEX	Power-A00004-26

• *The recommended torque value is 15-25 Ncm.*

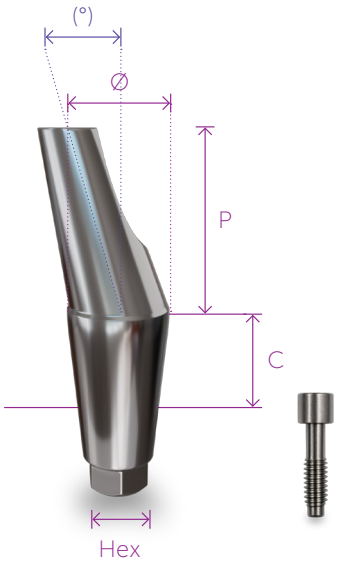

15° ANGLED ABUTMENT			
Diameter / ø	Gingiva Level / C	P / Angle / °	Reference Code
4.0	2.0	7 / 15° / HEX	Power-A00007-01
	3.0	7 / 15° / HEX	Power-A00008-01
	4.0	7 / 15° / HEX	Power-A00009-01
	5.0	7 / 15° / HEX	Power-A00010-01
5,0	2.0	7 / 15° / HEX	Power-A00007-02
	3.0	7 / 15° / HEX	Power-A00008-02
	4.0	7 / 15° / HEX	Power-A00009-02
	5.0	7 / 15° / HEX	Power-A00010-02
6,0	2.0	7 / 15° / HEX	Power-A00007-03
	3.0	7 / 15° / HEX	Power-A00008-03
	4.0	7 / 15° / HEX	Power-A00009-03
	5.0	7 / 15° / HEX	Power-A00010-03

• *The recommended torque value is 15-25 Ncm.*

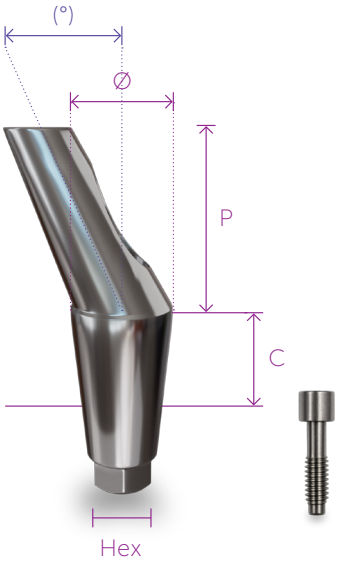

25° ANGLED ABUTMENT			
Diameter / ø	Gingiva Level / C	P / Angle / °	Reference Code
4.0	2.0	7 / 25° / HEX	Power-A00012-02
	3.0	7 / 25° / HEX	Power-A00011-01
	4.0	7 / 25° / HEX	Power-A00011-02
	5.0	7 / 25° / HEX	Power-A00011-03
5.0	2.0	7 / 25° / HEX	Power-A00012-04
	3.0	7 / 25° / HEX	Power-A00011-04
	4.0	7 / 25° / HEX	Power-A00011-05
	5.0	7 / 25° / HEX	Power-A00011-06

• *The recommended torque value is 15-25 Ncm.*

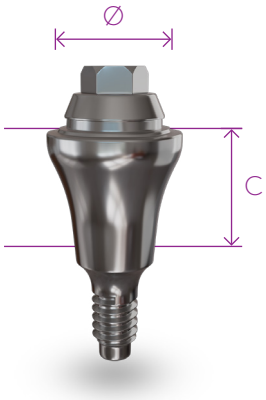

STRAIGHT MULTI UNIT ABUTMENT

Diameter / ø	Gingiva Level / C	Height / P	Reference Code
4.0	1.5	1,8 / NONHEX	Power-A00037-01
	2.5	1,8 / NONHEX	Power-A00037-02
	3.5	1,8 / NONHEX	Power-A00037-03
	4.5	1,8 / NONHEX	Power-A00037-04

- *The recommended torque value is 30-35 Ncm.*

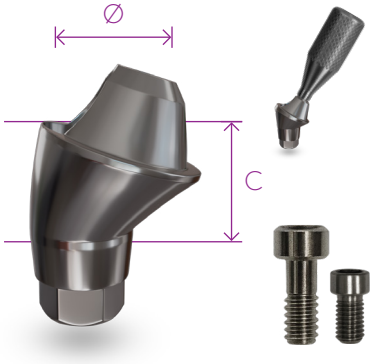

ANGLED MULTI UNIT ABUTMENT

Diameter / ø	Gingiva Level / C	Angle / °	Reference Code
4.5	2.5	17° / HEX	Power-A00034
	3.5	17° / HEX	Power-A00035
	4.5	17° / HEX	Power-A00035-02

- *The recommended torque value is 15-25 Ncm.*
- *The recommended torque value for prosthetic screw is 10-20 Ncm.*

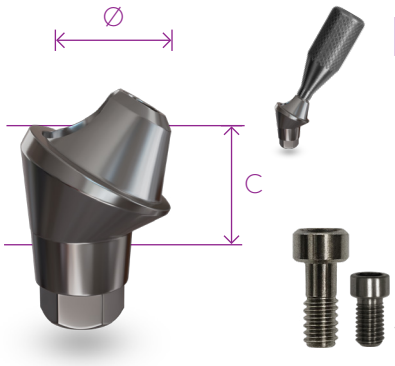

ANGLED MULTI UNIT ABUTMENT

Diameter / ø	Gingiva Level / C	Angle / °	Reference Code
4.5	2.5	30° / HEX	Power-A00031
	3.5	30° / HEX	Power-A00032
	4.5	30° / HEX	Power-A00032-02
	5.5	30° / HEX	Power-A00032-04

- *The recommended torque value is 15-25 Ncm.*
- *The recommended torque value for prosthetic screw is 10-20 Ncm.*

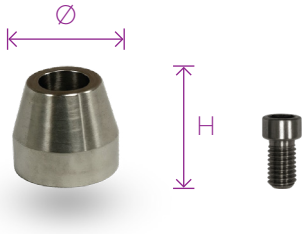

HEALING CAP FOR MUA		
Diameter / ø	Height / H (mm)	Reference Code
5.0	4	Power-A00037-22

• *The recommended torque value is 10-20 Ncm.*

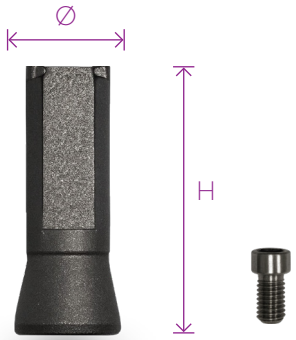

SCAN ABUTMENT FOR MUA		
Diameter / ø	Height / H (mm)	Reference Code
4.0	13.00	Power-A00037-18
	9.00	Power-A00037-28

• *The recommended torque value is 10-20 Ncm.*



SCAN ANALOG FOR MUA		
Diameter / ø	Height / H (mm)	Reference Code
4.8	11	Power-A00037-15
	11 / HEX	Power-A00037-27



LAB ANALOG FOR MUA		
Diameter / ø	Height / H (mm)	Reference Code
4.8	11	Power-A00037-25

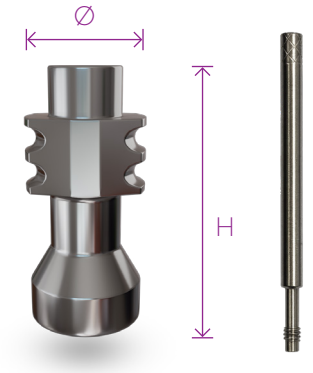

IMPRESSION COPING FOR OPENED TRAY FOR MUA

Diameter / ø	Height / H (mm)	Reference Code
4.8	NONHEX	Power-A00037-13

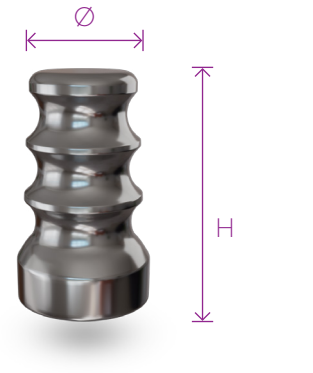

IMPRESSION COPING FOR CLOSED TRAY FOR MUA (TRANSFER TYPE)

Diameter / ø	Height / H (mm)	Reference Code
4.8	NONHEX (Transfer Type)	Power-A00037-10

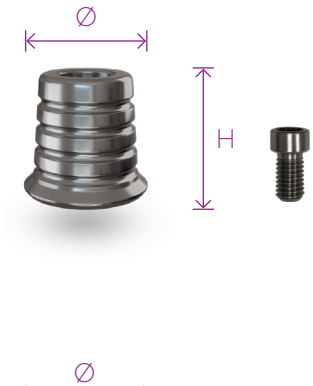

Ti-BASE ABUTMENT FOR MUA

Diameter / ø	Height / H (mm)	Reference Code
5.0	5.00	Power-A00037-07
	5.00 / HEX	Power-A00037-26

• *The recommended torque value is 10-20 Ncm.*

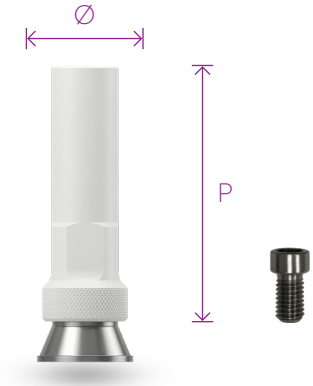

CCM CYLINDER ABUTMENT FOR MUA

Çap / ø	Height / H (mm)	Post Height / P	Reference Code
4.8	NONHEX (for MUA)	15	Power-A00037-19

• *The recommended torque value is 10-20 Ncm.*

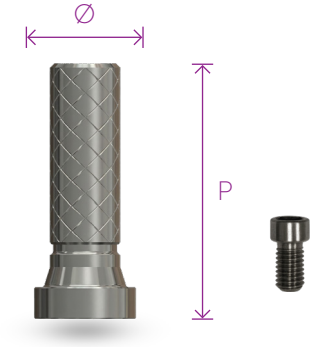

TEMPORARY ABUTMENT FOR MUA

Diameter / ø	Height / H (mm)	Post Height / P	Reference Code
4.8	NONHEX (for MUA)	12	Power-A00037-17

• *The recommended torque value is 10-15 Ncm.*

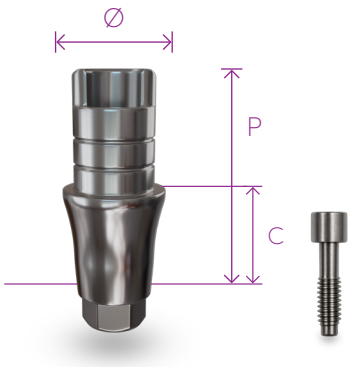

Ti-BASE ABUTMENT

Diameter / ø	Gingiva Level / C	Post Height / P	Reference Code
4.0	1.5	4.5	Power-A00002-21
	3	4.5	Power-A00003-21
	0.6	6	Power-A00001-23
	1.5	4.5 (NONHEX)	Power-A00002-40
	3	4.5 (NONHEX)	Power-A00003-25
	0.6	6 (NONHEX)	Power-A00001-33

• *The recommended torque value is 15-25 Ncm.*

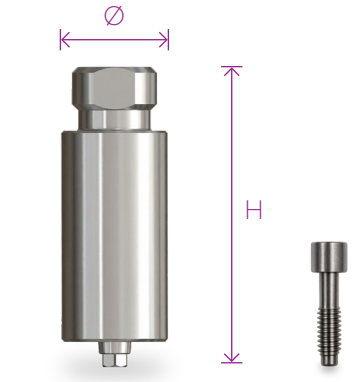

PREMILLED ABUTMENT

Diameter / ø	Height / H (mm)	Reference Code
10.0	20.00	Power-A00004-53
12.0	20.00	Power-A00004-54

• *The recommended torque value is 15-25 Ncm.*

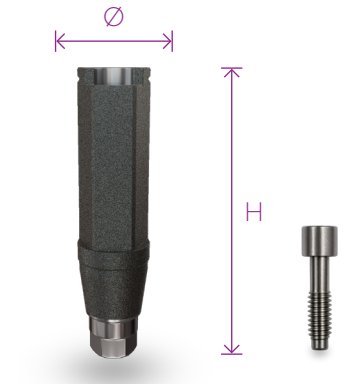

SCAN ABUTMENT

Diameter / ø	Height / H (mm)	Reference Code
4.0	9.00	Power-A00001-29
	13.00	Power-A00001-29

• *The recommended torque value is 15-25 Ncm.*

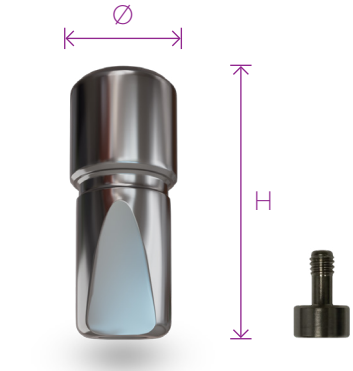

SCAN ANALOG

Diameter / ø	Height / H (mm)	Reference Code
4.0	9	Power-A00002-44



BALL ATTACHMENT ABUTMENT		
Diameter / ø	Gingiva Level / C	Reference Code
4.0	0	Power-A00025-01
	1	Power-A00025-02
	2	Power-A00025
	3	Power-A00026
	4	Power-A00027
	5	Power-A00028
	6	Power-A00029
Titanium Housing		Power-A00029-01
Retention Cap		Power-A00029-02

• The recommended torque value is 30-35 Ncm.

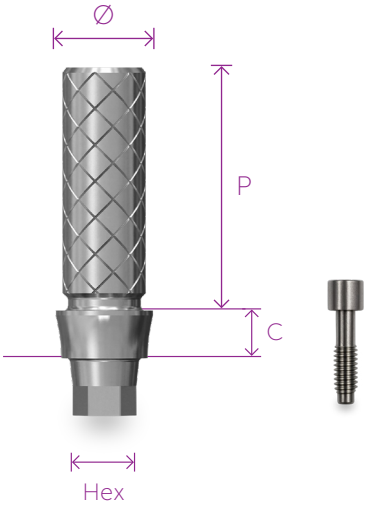

TEMPORARY ABUTMENT			
Diameter / ø	Gingiva Level / C	Height / P	Reference Code
4.0	2.0	10 / HEX	Power-A00004-45
	2.0	10 / NON-HEX	Power-A00004-46

• The recommended torque value is 10-15 Ncm.

SURGICAL KIT & DRILLING PROTOCOL





STOPPER

8 mm
Power-396.5000147

11.5 mm
Power-396.5000149

6 mm
Power-396.5000146

10 mm
Power-396.5000148

13 mm
Power-396.5000150

LANCE DRILL

Ø 1.6mm
Power-396.5000081K

PILOT DRILL

Ø 2.2-09.00 mm
Power-396.5000083N

Ø 2.2-12.50 mm
Power-396.5000085N

Ø 2.2-08.00 mm
Power-396.5000082N

Ø 2.2-11.00 mm
Power-396.5000084N

Ø 2.2-14.00 mm
Power-396.5000086N

SURGICAL DRILL

Ø 2.8 mm
Power-396.5000087N

Ø 3.3 mm
Power-396.5000151

Ø 3.8 mm
Power-396.5000152

Ø 4.2 mm
Power-396.5000153

Ø 4.5 mm
Power-396.5000154

Ø 5.0 mm
Power-396.5000155

SCREW DRIVER

AA-1.2 mm
Power-396.5000111

AA-1.2 mm
Power-396.5000112

AA-1.2 mm
Power-396.5000113

AA-1.2 mm
Power-396.5000114

IMPLANT DRIVERS

AA-2.3 mm
Power-396.5000141

AA-2.3 mm
Power-396.5000142

AA-2.3 mm
Power-396.5000107

AA-2.3 mm
Power-396.5000108

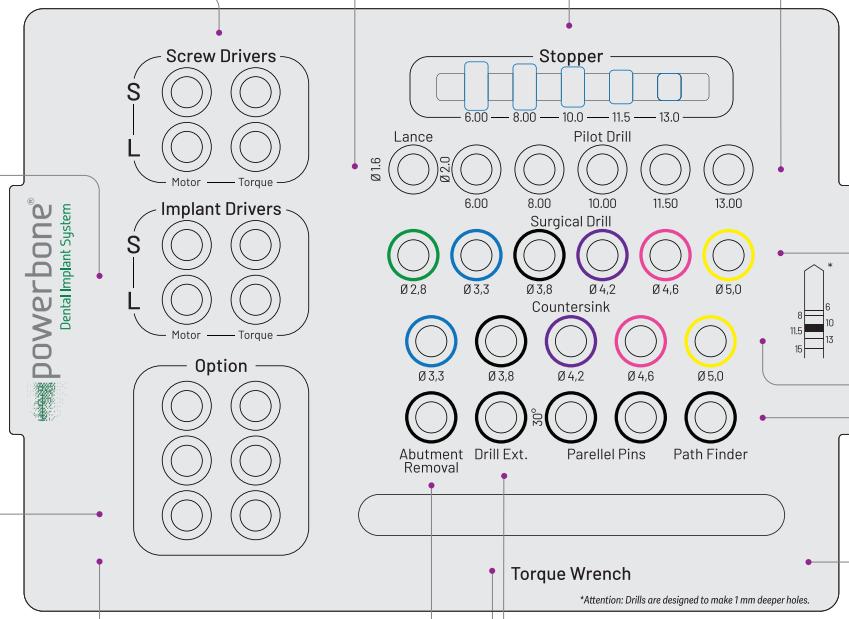

DEPTH GAUGE



Power-396.5000104

HOLDER FOR MUA

AA-1.2 mm
Power-396.5000115

MULTI UNIT DRIVER

Power-396.5000162

ABUTMENT REMOVAL

H: 17.5 mm
Power-396.5000126

DRILL EXTENSION

Power-396.5000116

PATH FINDER

Power-396.5000145

TORQUE WRENCH

Power-396.5000119

COUNTERSINK

Ø 3.8 mm
Power-396.5000157

Ø 4.6 mm
Power-396.5000159

Ø 3.3 mm
Power-396.5000156

Ø 4.2 mm
Power-396.5000158

Ø 5.0 mm
Power-396.5000160

D4 BONE

Undersized osteotomy is applied to enhance primary stability in low-density trabecular bone. The drilling sequence is based on the principle of limited expansion and supports bone compression. All drills are designed to provide 1.0 mm subcrestal preparation. Countersinking is not recommended.

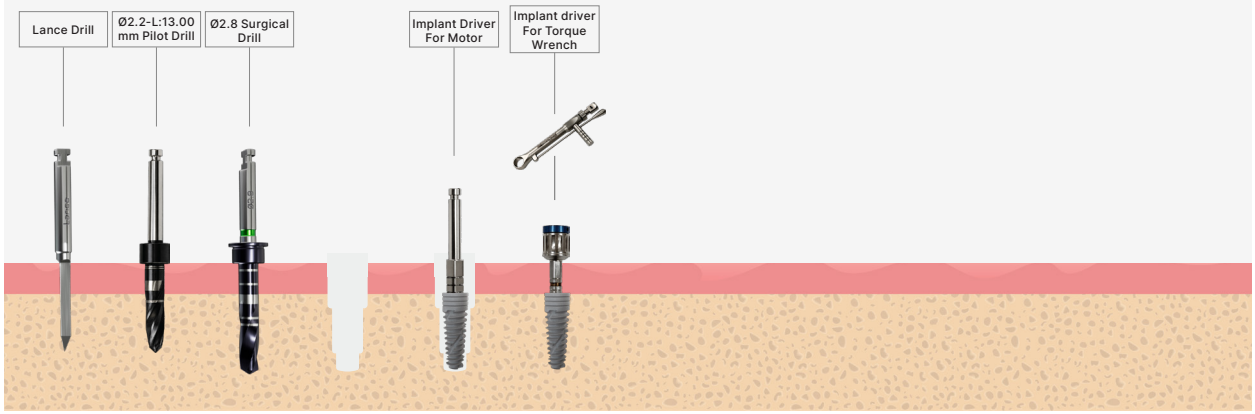

D2-3 BONE

In medium-density bone, balanced primary stability is targeted through controlled osteotomy.
A gradual expansion protocol is applied. The drills create a preparation depth suitable for 1.0 mm subcrestal placement.
Countersinking is optional depending on bone resistance.

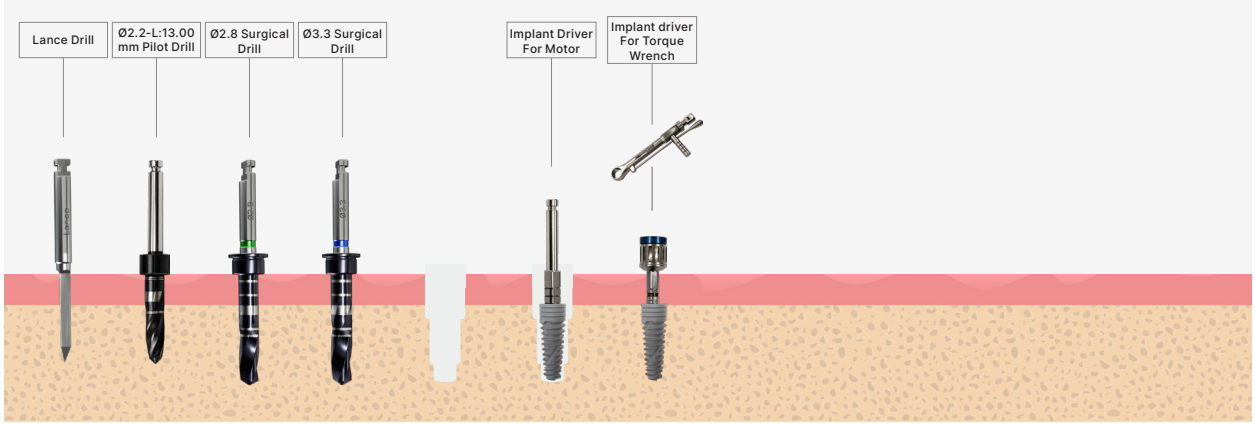

D1 BONE

In dense cortical bone, full-diameter preparation is recommended to prevent excessive compression and increased crestal stress. When necessary, cortical relief is achieved using a countersink.
The entire drilling sequence is planned based on 1.0 mm subcrestal implant placement.

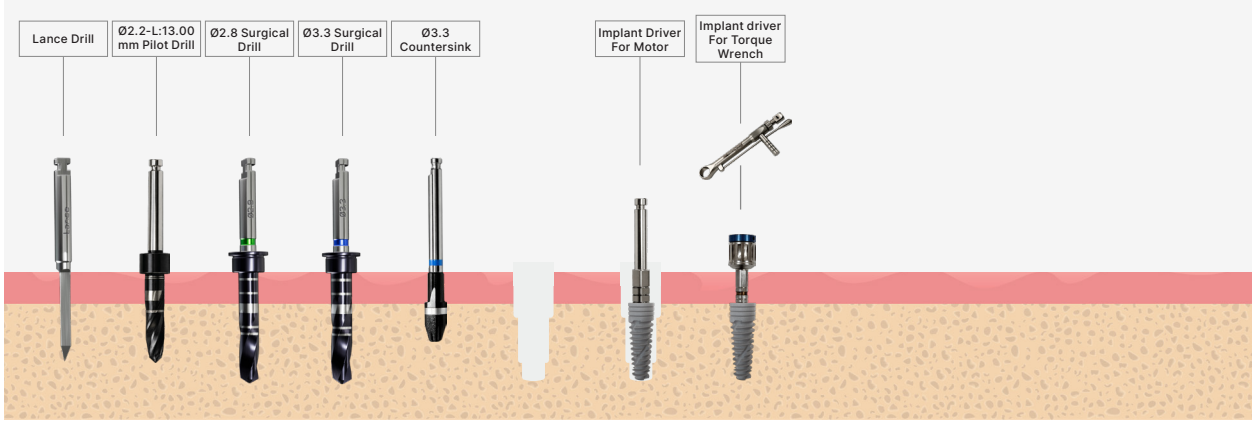

D4 BONE

In low-density bone, controlled undersized osteotomy is performed to enhance primary stability.
Trabecular compression is supported through a limited expansion protocol.
All drills are designed to create a 1.0 mm subcrestal preparation.
Countersinking is not performed.

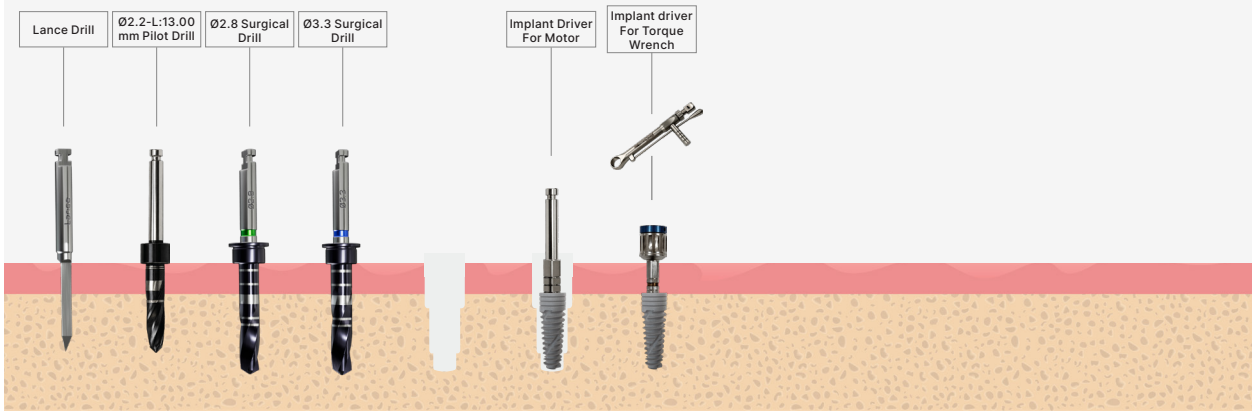

D2-3 BONE

In medium-density bone, balanced primary stability is achieved through progressive expansion.
The osteotomy is completed with a stepwise sequence corresponding to the implant diameter.
The preparation depth is planned based on 1.0 mm subcrestal implant placement.
Countersinking is optional depending on clinical requirements.

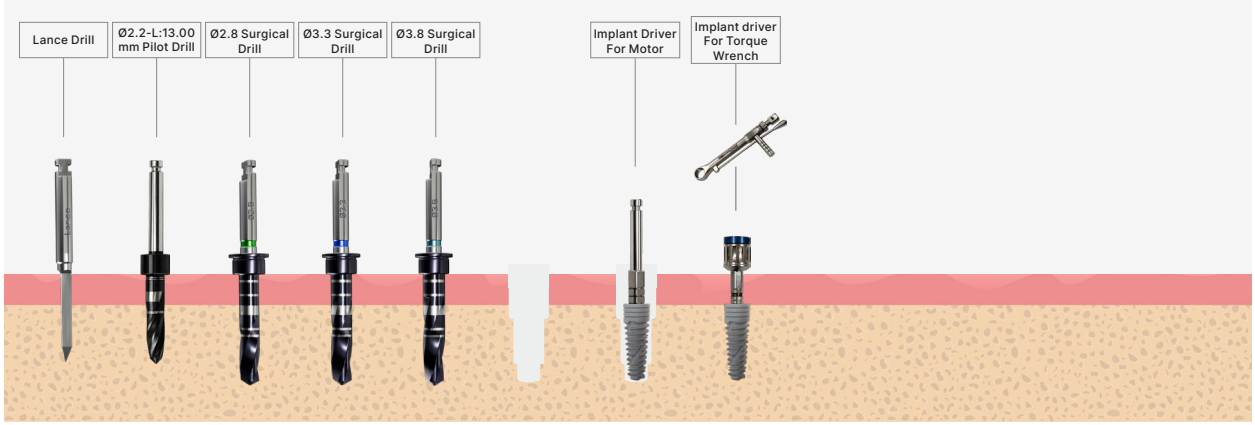

D1 BONE

In dense cortical bone, full-diameter preparation is recommended to prevent excessive compression and increased crestal stress. When necessary, cortical relief is achieved using a countersink.
The drilling sequence is designed based on 1.0 mm subcrestal implant placement.

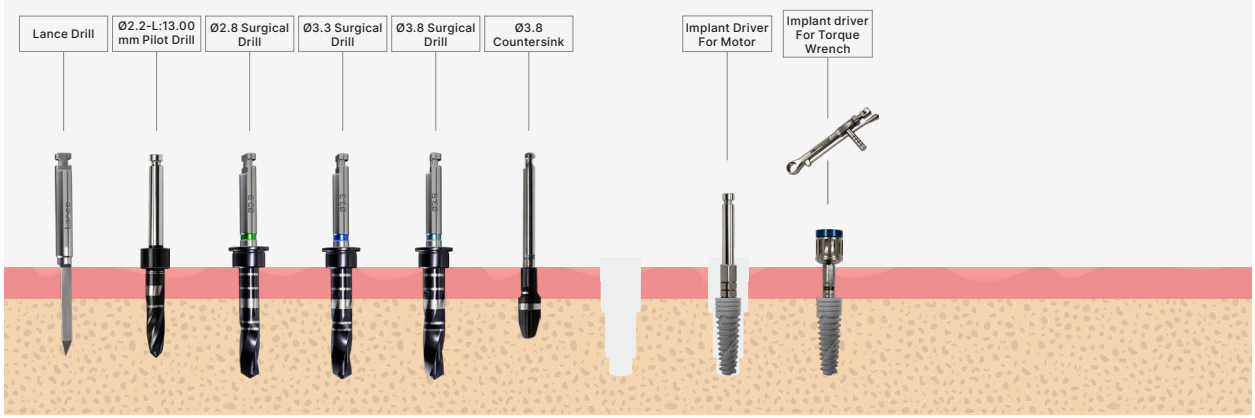

D4 BONE

In low-density bone, undersized preparation is applied to maximize primary stability.
Expansion is kept limited and bone compression is supported.
All drills are designed to create a 1.0 mm subcrestal osteotomy.
Countersinking is not recommended.

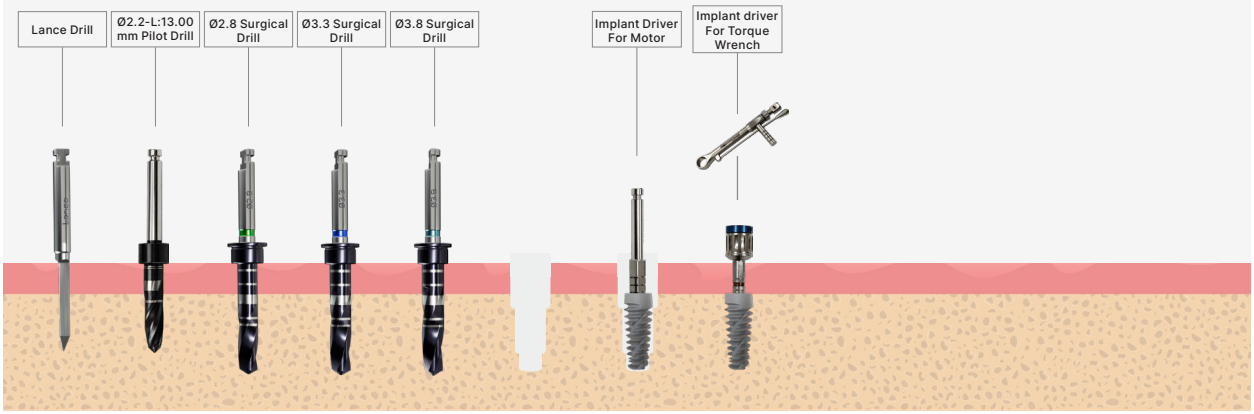

D2-3 BONE

In medium-density bone, stability and bone preservation are balanced through controlled osteotomy.
The progressive drilling sequence is completed in accordance with the implant diameter.
Preparation is planned based on 1.0 mm subcrestal placement.
Countersinking may be applied depending on bone resistance.

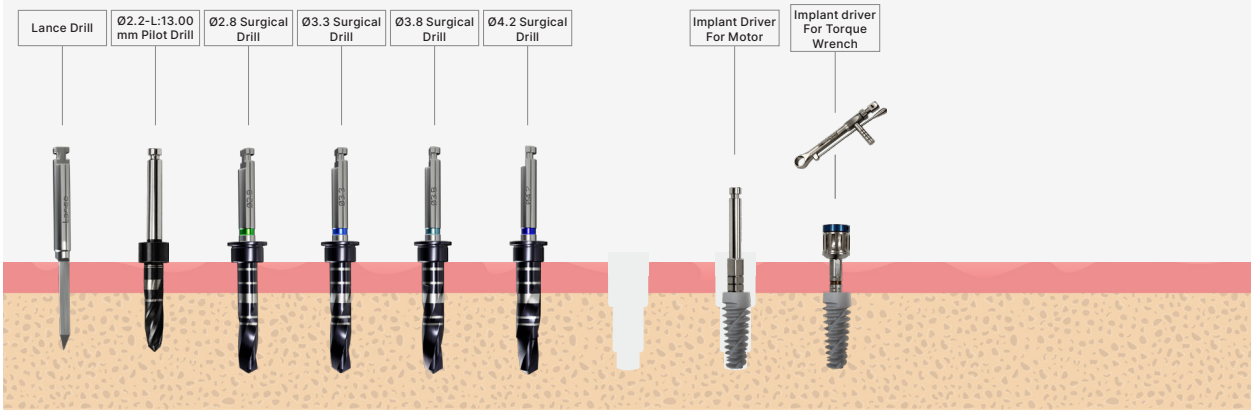

D1 BONE

In dense bone, full-diameter preparation is performed to prevent an increase in cortical stress.
Crestal cortical relief using a countersink is recommended.
The drilling protocol is based on the principle of 1.0 mm subcrestal implant placement.

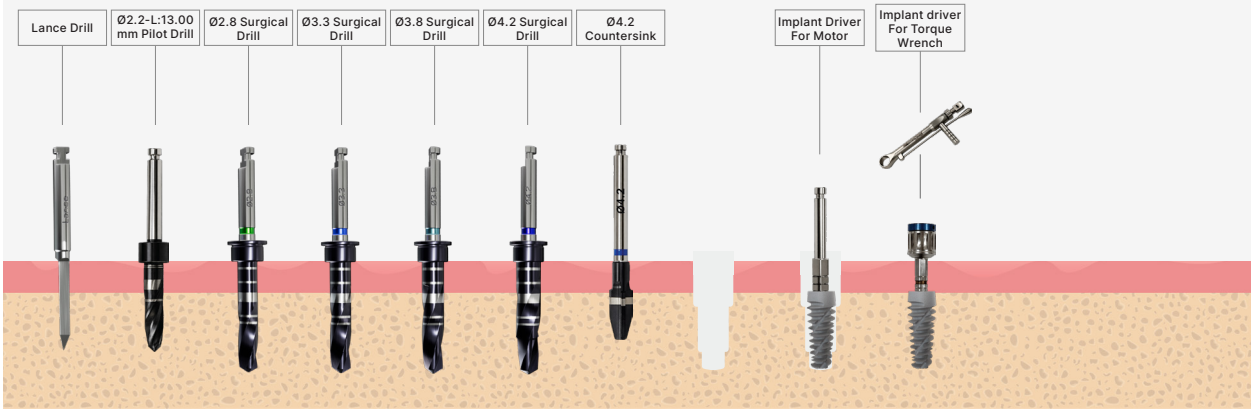

D4 BONE

In low-density bone, undersized osteotomy is performed to enhance primary stability.
Controlled compression is achieved through gradual expansion.
All drills are designed to create a 1.0 mm subcrestal preparation.
Countersinking is not performed.

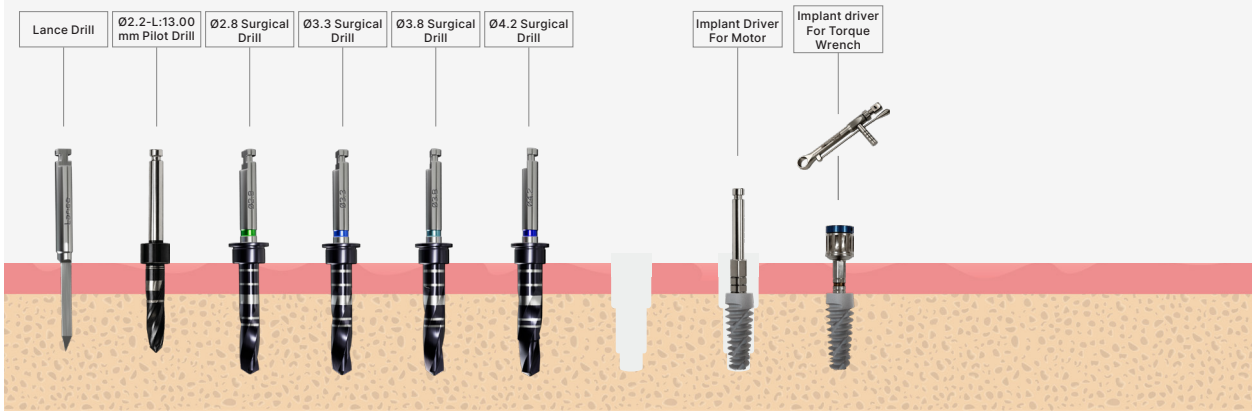

D2-3 BONE

In medium-density bone, stepwise osteotomy preparation is performed to achieve balanced primary stability.
The sequence is based on progressive expansion in accordance with the implant diameter.
The drilling depth is suitable for 1.0 mm subcrestal placement.
Countersinking is optional depending on bone resistance.

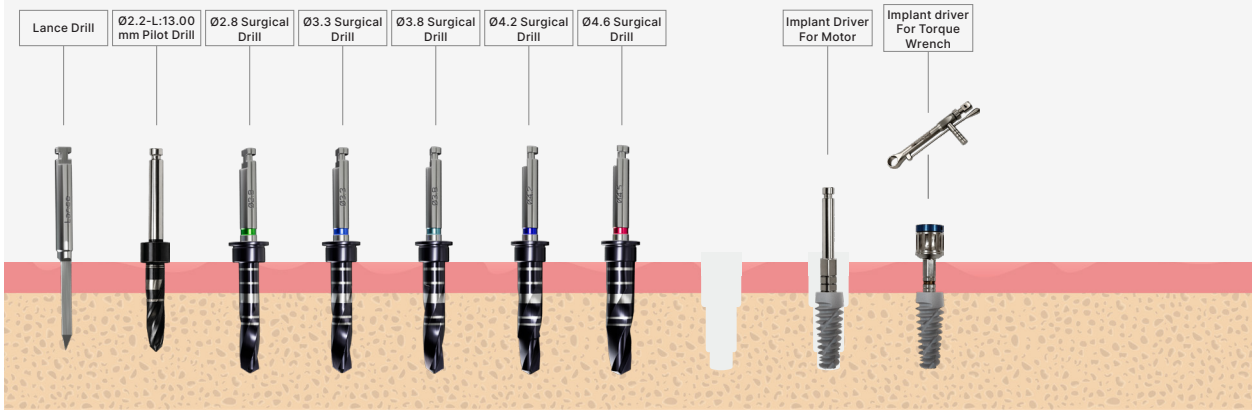

D1 BONE

In dense cortical bone, full-diameter preparation is recommended to prevent excessive compression.
When necessary, crestal cortical relief is achieved using a countersink.
The protocol is planned based on 1.0 mm subcrestal implant placement.

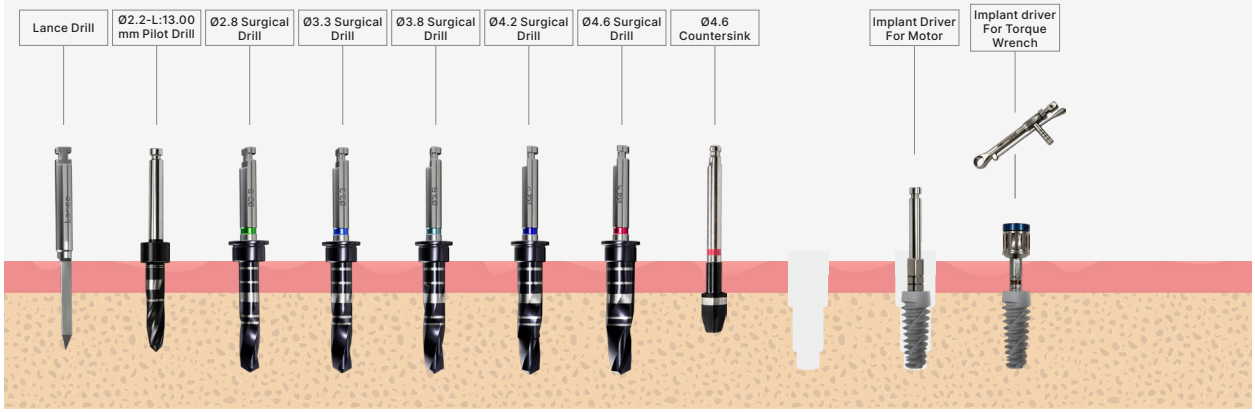

D4 BONE

In low-density bone, controlled undersized preparation is performed to maximize primary stability.
Trabecular compression is supported through a limited expansion protocol.
All drills are designed to create a 1.0 mm subcrestal osteotomy.
Countersinking is not recommended.

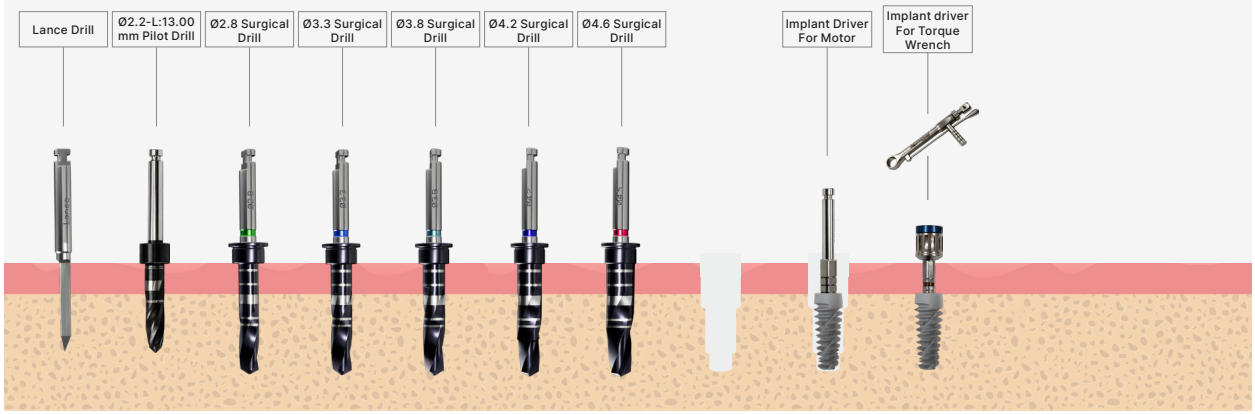

D2-3 BONE

In medium-density bone, stability and bone preservation are balanced through progressive expansion.
The osteotomy is completed in accordance with the implant diameter.
The preparation depth is planned for 1.0 mm subcrestal placement.
Countersinking may be applied depending on clinical requirements.

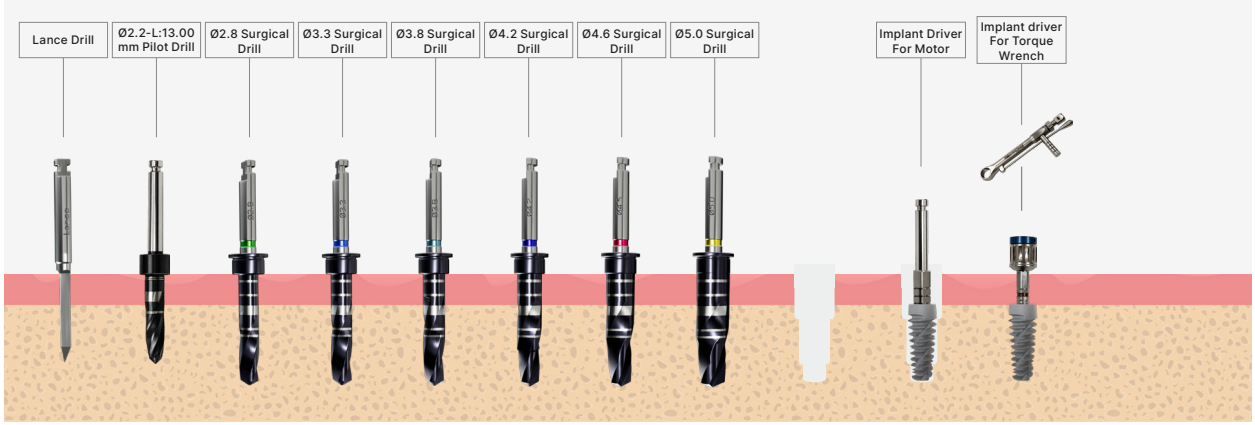

D1 BONE

In dense bone, full-diameter preparation is performed to prevent increased cortical stress and excessive compression.
Crestal cortical relief using a countersink is recommended.
The drilling sequence is designed based on the principle of 1.0 mm subcrestal implant placement.

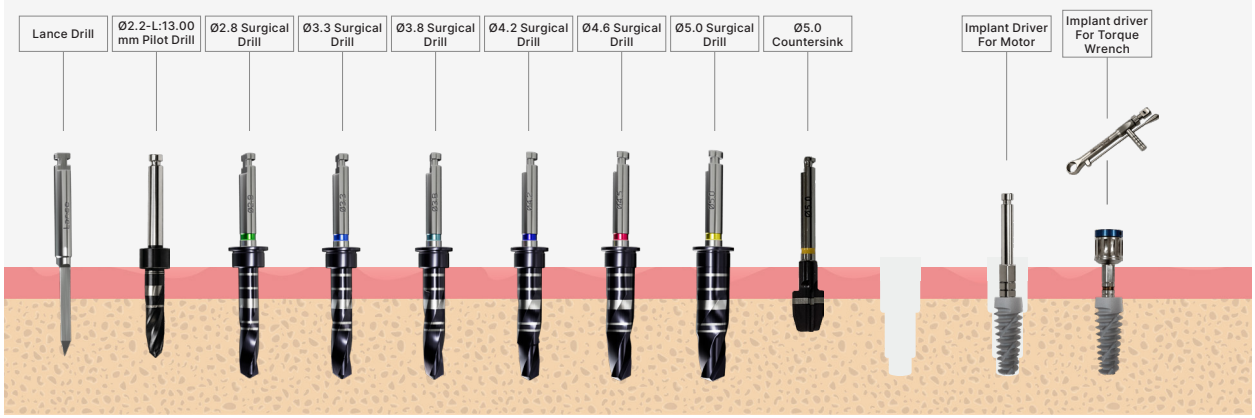

Notes

Next Generation
Implant Technology

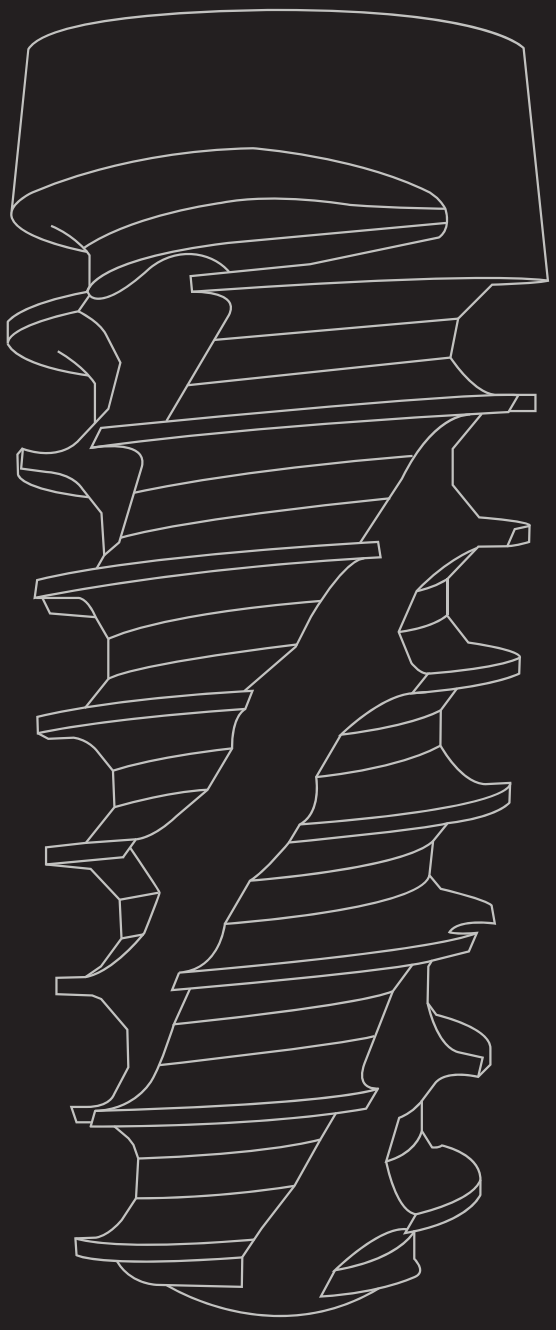

powerbone

powerbonedentalimplant.com

info@bonegraft.com.tr

+90 236 373 33 38

Keçiliköy OSB Mah. İsmail Kahraman Cad. No: 1/1/A
P.C: 45030 Yunusemre, MANİSA / TÜRKİYE

for website